Corvi LED Light

Flood Light 25

Type	Outdoor
Power Consumption	25 W
Luminous Flux	3750 @ 5700 K (Lm)
Color Rendering Index	> 80 Ra
Power Factor (PF)	> 0.97
Operating Temperature	-30℃ ~ +50℃
IP	67
Color Temperature (CCT)	3K /4K/5.7K
Operating Voltage	200-240 V AC, 50/60 Hz
Dimension	209 X 200 X 48 (mm)
Weight	260 gm

Safety standard

i. Do not attempt to disassemble, repair or perform any unauthorised modifications on the luminaire

ii. Do not handle with wet hands, immerse in liquids or expose to water and rain, electric shock or fire may result

iii. Keep out of reach from children

iv. Do not operate luminaire in presence of flammable gas or vapors

v. Do not use product if it emits smoke or a strange odour; disconnect power source immediately to avoid personal injury and contact place of purchase

vi. Do not intentionally stare or gaze at LED lumianire for prolonged periods while the luminaire is on

vii. Do not use or leave luminaire in conditions of extreme heat, severe cold or high humidity

viii. Risk Of fire or electric shock. LED retrofit installation must be done by a qualified electrician and all safety instructions must be followed to avoid a risk of injury and property damage. Do not disassemble this product and replace any LED or other internal components. When the light source reaches its end of life the whole luminaire should be replaced

ix. Remove any cracked protective shield

Flood Light

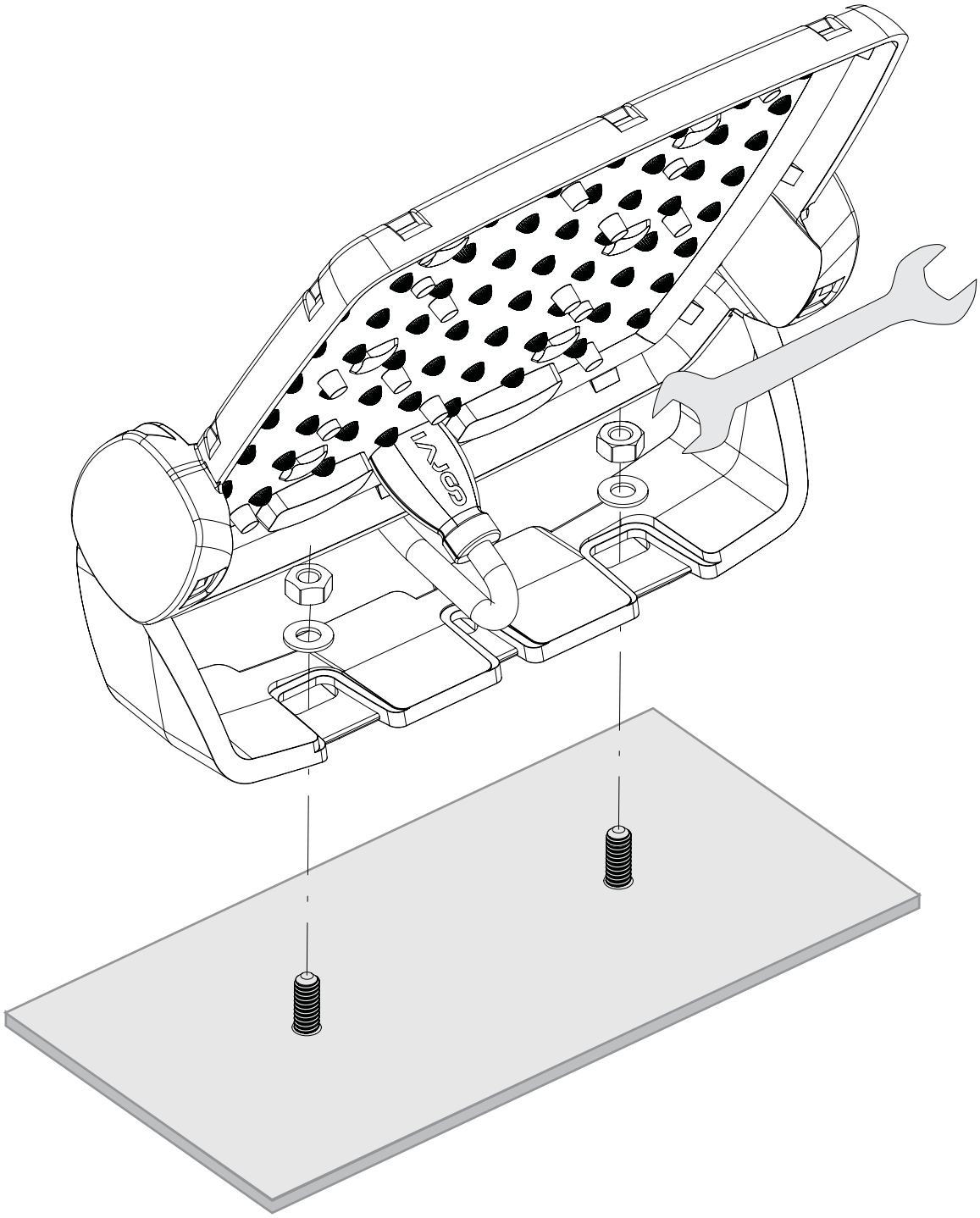

Floor Mounting

M6 Anchor Fastner

Wall Mounting

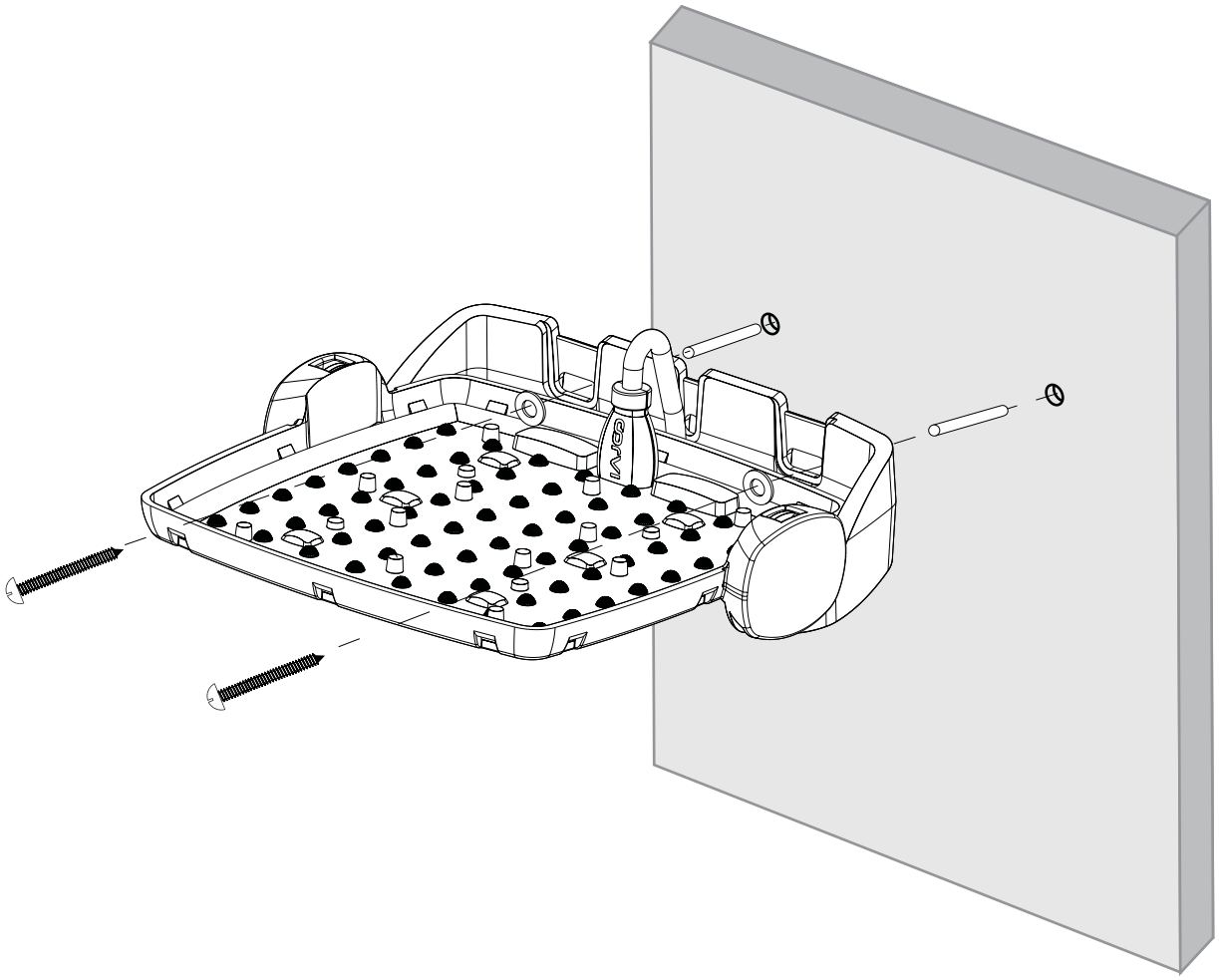

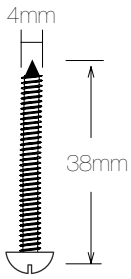

Sr.No. 8

Use Self Tapping SS Screws

Wall Mounting

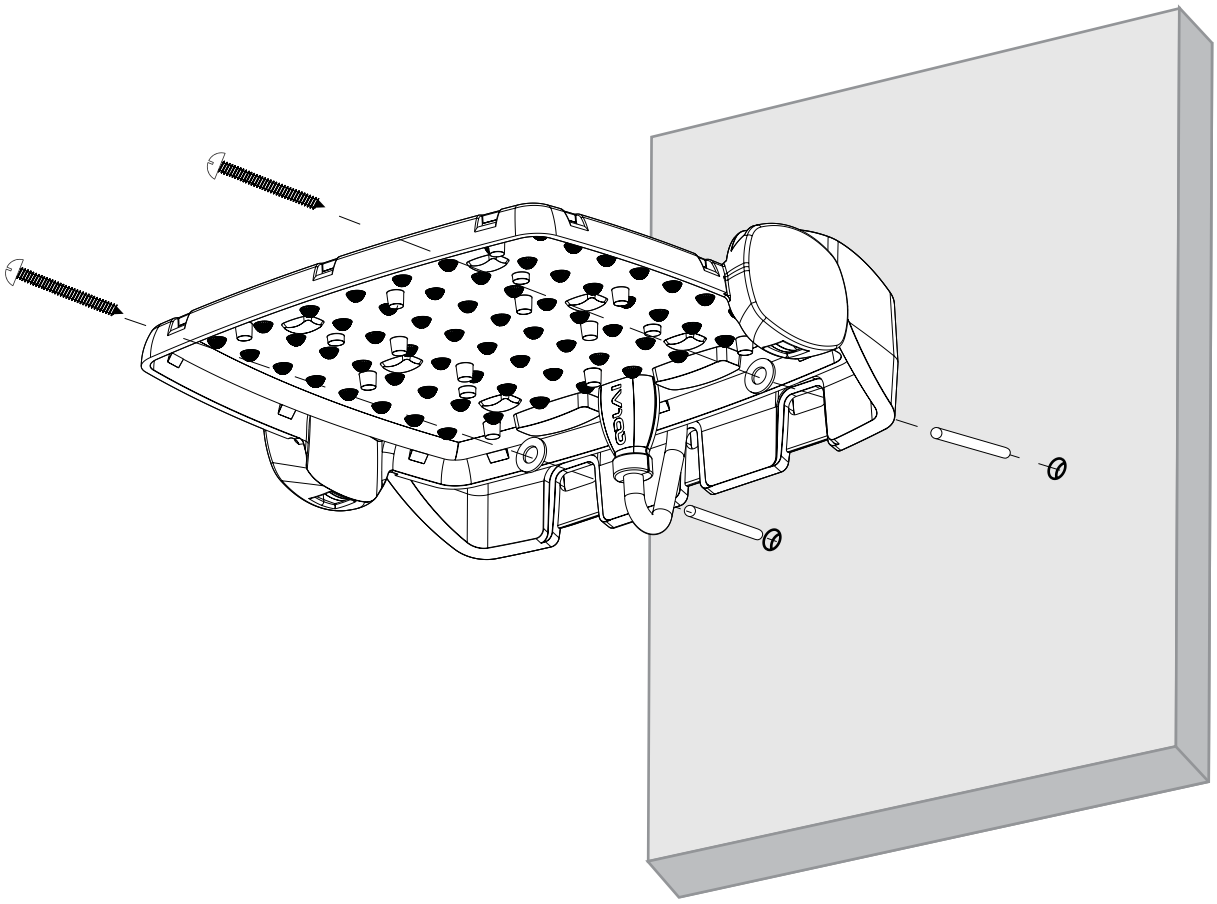

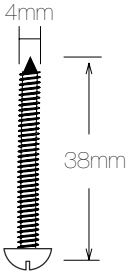

Sr.No. 8

Use Self Tapping SS Screws
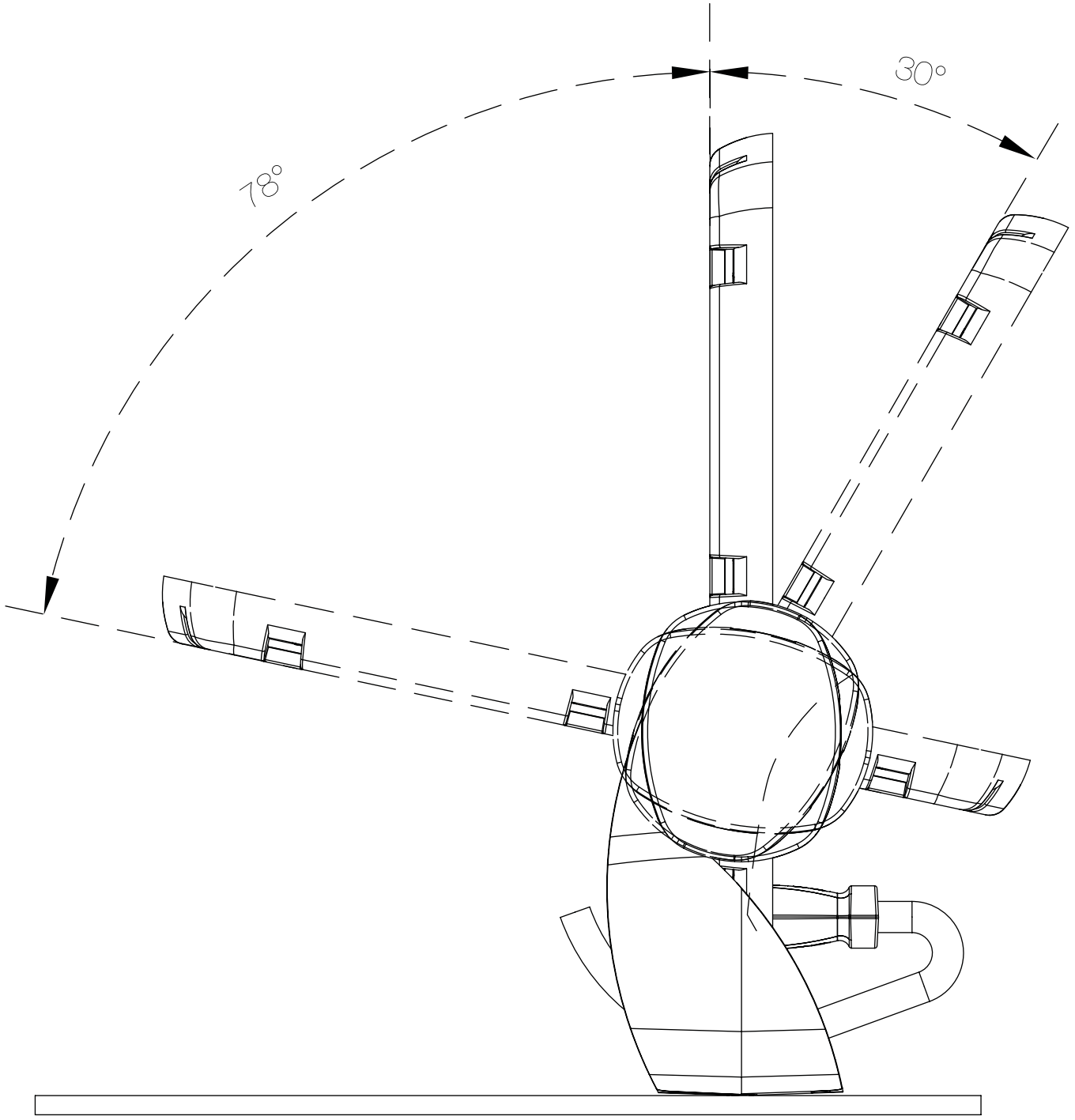
Tiltability Mechanism