Corvi LED Light

Flat 6

Type	Indoor
Power Consumption	15 W
Luminous Flux	2250 @ 5700 K (Lm)
Color Rendering Index	> 80 Ra
Power Factor (PF)	> 0.97
Operating Temperature	-30°C ~ +50°C
IP	53
Color Temperature (CCT)	3K /4K/5.7K
Operating Voltage	200-240 V AC, 50/60 Hz
Dimension	Ø 165 X 33 (mm)
Weight	107 gm

Safety standard

i. Do not attempt to disassemble, repair or perform any unauthorised modifications on the luminaire

ii. Do not handle with wet hands, immerse in liquids or expose to water and rain, electric shock or fire may result

iii. Keep out of reach from children

iv. Do not operate luminaire in presence of flammable gas or vapors

v. Do not use product if it emits smoke or a strange odour; disconnect power source immediately to avoid personal injury and contact place of purchase

vi. Do not intentionally stare or gaze at LED luminaire for prolonged periods while the luminaire is on

vii. Do not use or leave luminaire in conditions of extreme heat, severe cold or high humidity

viii. Risk Of fire or electric shock. LED retrofit installation must be done by a qualified electrician and all safety instructions must be followed to avoid a risk of injury and property damage. Do not disassemble this product and replace any LED or other internal components. When the light source reaches its end of life the whole luminaire should be replaced

ix. Remove any cracked protective shield

Product dimension

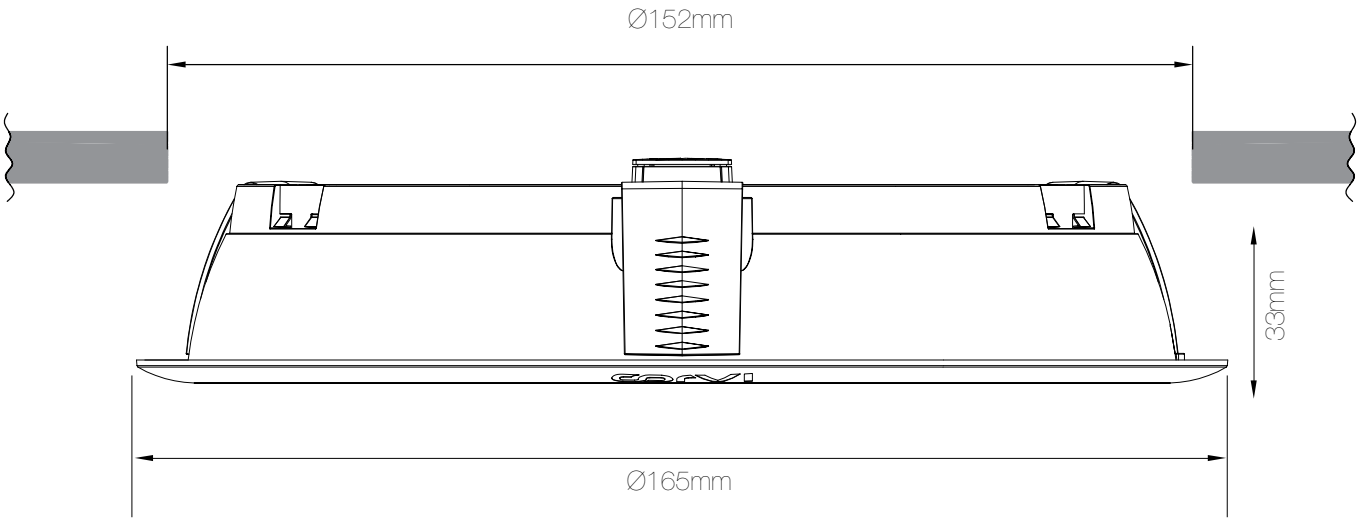

Installation instructions

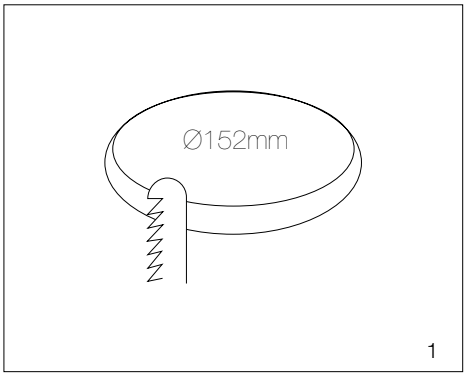

Cut out size

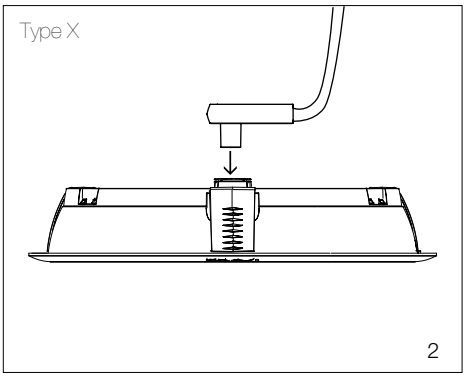

Mains cables can be easily replaced, Use only Corvi mains cable

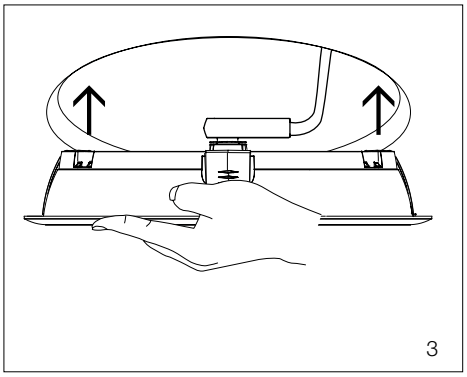

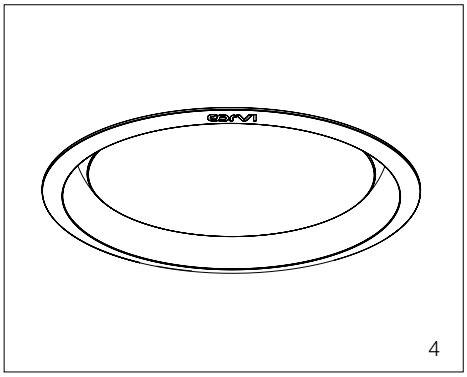

Clip mounts luminaries, not suitable for tubular mount.
Power cable: 1) Use only Corvi mains cable. 2) Avoid multiple joints or adaptor before luminaries.